Model 515

Application BF02

Dual Stage Batch/Flow Controller

for Volumetric Analog Flowmeters

Features

- Tailored for volumetric analog input such as vortex flowmeters
- Single or Dual stage control
- Preset or manual On-Off modes
- Easy access to batch and flow rate presets
- No-flow, leakage and overflow error detection
- Remote RUN/STOP/RESET
- Allows for permissive with prompt
- Uses PI Loop Control
- Allows for non-linear correction
- Storage of 1000 transactions with time and date stamp
- Selection of second language and user tags
- Selectable protocols on serial ports including Modbus RTU and Printer output
- Backlit display with LCD backup

CE

Overview

The 515 BF02 application is a batching flow controller for delivery of preset quantities at preset flowrates using a volumetric analog input. Batch control can operate in preset or on-off modes, while flow control can be set to local (manual) or PI loop mode.

This application provides the operator with clear local readout including flowrate deviation and can be controlled via communications in more automated systems. There is quick access to commonly used preset values directly from the front panel if access has been authorized.

The PI control of the process flow is via a 4-20mA proportional valve or pump controller. It has integral wind-up protection, a deadband, output hold and ramp time that can be programmed to reduce wear on valves and actuators and provide for bumpless operation.

Calculations

To derive the flow rate, the analog input is normalised to a value (A) between 0 and 1.

$$volumeflow = (V_f max - V_f min)A + V_f min$$

$$volume = \int (volumeflow \cdot \Delta t)$$

Automatic overrun compensation calculates the new valve closure point to ensure correct delivery by averaging the overrun amount from the last three complete batches.

The overrun compensation value is valid for a new preset value provided the stored overrun is less than 20% of the new preset.

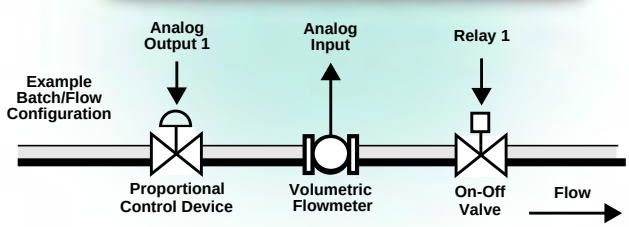

Accuracy • Quality • Performance

Displayed Information

The front panel display shows the current values of the input variables and the results of the calculations. A list of the variables for this application and their type (total or rate) is shown at the end of this document.

The instrument can be supplied with a real-time clock for storage of up to 1000 transactions with time and date stamps.

Communications

There are two communication ports available as follows:

- RS-232 port
- RS-485 port (optional)

The ports are available for remote data reading, printouts and for initial application loading of the instrument.

Isolated Outputs

The opto-isolated outputs can retransmit any main menu variable. The type of output is determined by the nature of the assigned variable. Totals are output as pulses and rates are output as 4-20mA signals. One output is standard, a second output is available as an option.

Relay Outputs

The relay outputs 1 and 2 are used to control the flow of product for each delivery. These contacts are normally open and can be used to drive external relays, valves, pump circuits etc. The advanced option provides another two relays that can be used as fully programmable alarms for any rate type variable.

Software Configuration

The instrument can be further tailored to suit specific application needs including units of measurement, custom tags, second language or access levels. A distributor can configure these requirements before delivery.

Instrument parameters including units of measurement can be programmed in the field, according to the user access levels assigned to parameters by the distributor.

All set-up parameters, totals and logged data are stored in non-volatile memory with at least 30 years retention.

Terminal Designations

Terminal Label			Designation	Comment
3	SG	-	Signal ground	
11	AINP3	+	Analog input ch 3 (+)	Main or low flow input
12		-	Analog input ch 3 (-)	
13	AINP4	+	Analog input ch 4 (+)	High flow stacked input
14		-	Analog input ch 4 (-)	
15	Vo	+	8-24 volts DC output	Overload protected
16	G	-	DC Ground	
17	Vi	+	DC power input	DC power in 12-28V
18	SH	E	Shield terminal	
19	RS485	+	RS485 (+)	Optional RS485 port
20		-	RS485 (-)	
21		G	RS485 ground	
22	LOGIC INPUTS	1+	Switch 1	Remote Run
23		2+	Switch 2	Remote Stop
24		3+	Switch 3	Remote Reset
25		4+	Switch 4	Permissive Input
26		C-	Signal ground	
27	OUT1	+	Output ch 1 (+)	Process control output
28		-	Output ch 1 (-)	
29	OUT2	+	Output ch 2 (+)	Optional output
30		-	Output ch 2 (-)	
31	RELAYS	RC	Relay common	
32		R1	Relay 1	Single Stage Control
33		R2	Relay 2	Dual Stage Control
34		R3	Relay 3	Optional relays
35		R4	Relay 4	
E	AC MAINS	E	Mains ground	AC power in 95-135V or 190-260V
N		N	Mains neutral	
A		A	Mains active	
RS232 port			9-pin serial port	

Dimension Drawings

Part Number

515.XXXXXX-BF02
see **Product Codes** to select required features

Default Application software:
515-BF02-000000

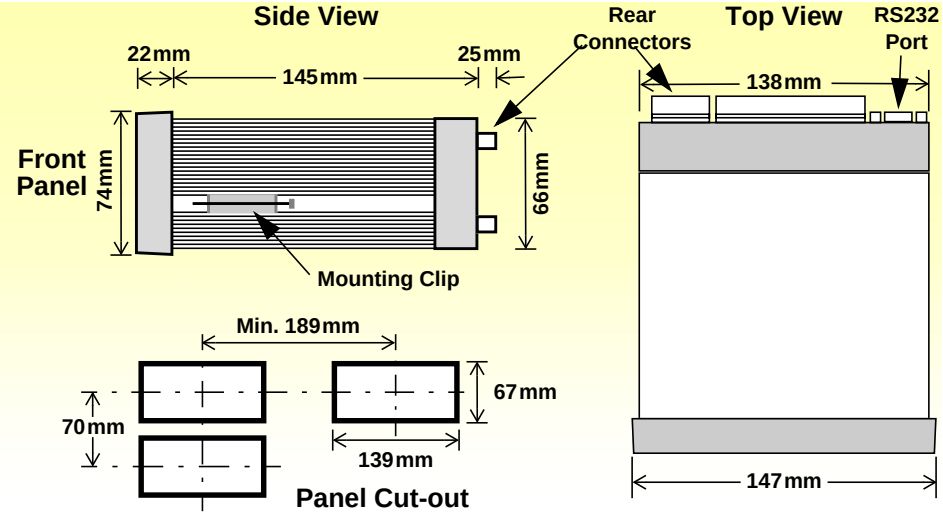

Specifications

Operating Environment

Temperature	-20°C to +60°C (conformal coating) +5°C to +40°C (no coating)
Humidity	0 to 95% non condensing (conformal coating) 5% to 85% non condensing (no coating)
Power Supply	95...135 V AC or 190...260 V AC or 12...28 V DC
Consumption	6W (typical)
Protection	Sealed to IP65 (Nema 4X) when panel mounted
Dimensions	147mm (5.8") width 74mm (2.9") height 167mm (6.6") depth

Display

Type	Backlit LCD with 7-digit numeric display and 11-character alphanumeric display
Digits	15.5mm (0.6") high
Characters	6mm (0.24") high
LCD Backup	Last data visible for 15min after power down
Update Rate	0.3 second

Non-volatile Memory

Retention	> 30 years
Data Stored	Setup, Totals and Logs

Approvals

Interference	CE compliance
Enclosure	ATEX, FM, CSA and SAA approved enclosures available for hazardous areas

Real Time Clock (Optional)

Battery Type	3 volts Lithium button cell (CR2032)
Battery Life	5 years (typical)

Analog Input (General)

Overcurrent	100mA absolute maximum rating
Update Time	< 1.0 sec
Configuration	4-20mA, 0-5V and 1-5V input
Non-linearity	Up to 20 correction points (some inputs)

4-20mA Input

Impedance	100 Ohms (to common signal ground)
Accuracy	0.05% full scale (20°C) 0.1% (full temperature range, typical)

0-5 or 1-5 Volts Input

Impedance	10MOhms (to common signal ground)
Accuracy	0.05% full scale (20°C) 0.1% (full temperature range, typical)

Logic Inputs

Signal Type	CMOS, TTL, open collector, reed switch
Overvoltage	30V maximum

Relay Output

No. of Outputs	2 relays plus 2 optional relays
Voltage	250 volts AC, 30 volts DC maximum (solid state relays use AC only)
Current	3A maximum

Communication Ports

Ports	RS-232 port RS-485 port (optional)
Baud Rate	2400 to 19200 baud
Parity	Odd, even or none
Stop Bits	1 or 2
Data Bits	8
Protocols	ASCII, Modbus RTU, Printer*

Transducer Supply

Voltage	8 to 24 volts DC, programmable
Current	70mA @ 24V, 120mA @ 12V maximum
Protection	Power limited output

Isolated Output

No. of Outputs	1 configurable output (plus 1 optional)
Configuration	Pulse/Digital or 4-20mA output

Pulse/Digital Output

Signal Type	Open collector
Switching	200mA, 30 volts DC maximum
Saturation	0.8 volts maximum
Pulse Width	Programmable: 10, 20, 50, 100, 200 or 500ms

4-20mA Output

Supply	9 to 30 volts DC external
Resolution	0.05% full scale
Accuracy	0.05% full scale (20°C) 0.1% (full temperature range, typical)

Important: Specifications are subject to change without notice. Printer protocol is available only if RTC option is installed.

Ordering Information

Product Codes

Model	Supplementary Code							Description
515 .							- BF02	
Enclosure	1							Panel mount enclosure
	2							Field mount enclosure (not yet available)
	3/5							Explosion proof Ex410 with metric glands (5 specifies heater version)
	4/6							Explosion proof Ex410 with NPT glands (6 specifies heater version)
Output Options		0						4 logic inputs, 1 isolated output, 2 relays (only relay type 1 is available), RS232 (DB9) communication port
		1						4 logic inputs, 2 isolated outputs, 4 relays, real-time clock data logging, RS232 (DB9) and RS485 communication ports
		2/3						4 logic inputs, 2 isolated outputs, 4 relays, real-time clock data logging, RS232 (DB9) and Ethernet/RF communication ports (not yet available)
Relay Type			1					Electromechanical relays only
			2					2 electromechanical and 2 solid state relays
			3					Solid state relays only (not yet available)
Power Supply				E				For 220/240 VAC
				A				For 110/120 VAC
				D				For DC power only 12-28 VDC
Display Panel Option					F			Fully optioned (with backlight & LCD backup)
PCB Protection						C		**Conformal coating** - required for maximum environmental operating range. Recommended to avoid damage from moisture and corrosion.
						N		**None** - suitable for IEC standard 654-1 Climatic Conditions up to Class B2 (Heated and/or cooled enclosed locations)
Application Pack Number							BF02	Defines the application software to be loaded into the instrument

Example full product part number is 515.112EFC-BF02 (this is the number used for placing orders).

Main Menu Variables

Main Menu Variables	Default Units	Preferred Units	Variable Type
Volume	L		Total
Volume Flowrate	L/min		Rate
Control Output	%		Rate
Flowrate Deviation	%		Rate

500 Series in Ex410 Enclosure

Procon Instrument Technology
1/119 Delta Street Geebung QLD 4034
PO Box 663 Virginia BC QLD 4014
07 3823 1922
sales@proconit.com.au
www.proconit.com.au

ABN: 26 010 529 423